S-5!®

The Right Way!

S-5-K Grip™ Clamp

The S-5-K Grip™ clamp was specifically developed to fit Klip-Rib® and other bulb snap-together seams. The design utilizes multiple inserts (sold separately) in order to accommodate a variety of bulb snap-together profiles. Each insert has a unique shape that allows for a tight fit and provides increased holding strength over other attachment options.

The S-5-K Grip also eliminates the large moment arm other clamps use for these profiles. Instead, it features a low mounting surface area, with the mounting bolt directly over the center of the seam. This dramatically increases the strength of the clamp, making it perfect for use with heavy-duty applications.

The head of the flanged bolts control the amount of compression, which reduces the possibility of over-compressing the seam, and makes installation a snap!

Just place the clamp on the seam, position the insert piece, and tighten the flanged bolts at the base. Then, affix ancillary items using the top bolt provided. Go to: www.S-5.com/tools for information about properly attaching S-5!® clamps.

S-5-K Grip™ Mini Clamp

The S-5-K Grip Mini is a bit shorter than the S-5-K Grip and has one base bolt rather than two. The mini is the choice for attaching all kinds of rooftop accessories: signs, walkways, satellite dishes, antennas, rooftop lighting, lightning protection systems, solar arrays, exhaust stack bracing, conduit, condensate lines, mechanical equipment—just about anything!*

*S-5! mini clamps are not compatible with, and should not be used with, S-5! SnoRail™/SnoFence™ or ColorGard® snow retention systems.

1

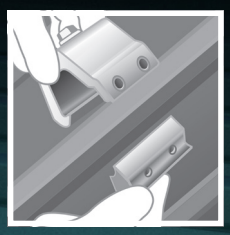

2

3

4

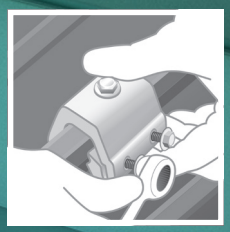

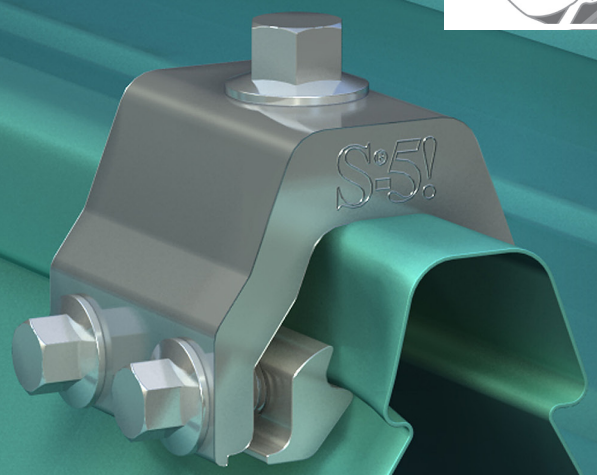

The S-5-K Grip™ was specifically developed to fit Klip-Rib® and other bulb snap-together seams.

The right way to attach almost anything to metal roofs!

S-5-K Grip™ and S-5-K Grip™ Mini

888-825-3432 | www.S-5.com

S-5!®
The Right Way!

The S-5-K Grip™ eliminates the large moment arm and features a low mounting surface area with the mounting bolt directly over the center of the seam, which dramatically increases the strength of the clamp.

The **S-5-K Grip™** and **S-5-K Grip Mini** clamps are each furnished with the hardware shown to the right. A structural aluminum attachment clamp, the S-5-K Grip is compatible with most common metal roofing materials excluding copper. All included hardware is stainless steel. Please visit **www.S-5.com** for more information including CAD details, metallurgical compatibilities, and specifications.

The S-5-K Grip clamp has been tested for load-to-failure results on a variety of standing seam roof profiles from leading panel manufacturers. The independent lab test reports found on our website at **www.S-5.com** prove that S-5!® holding strength is unmatched in the industry.

Example Profile

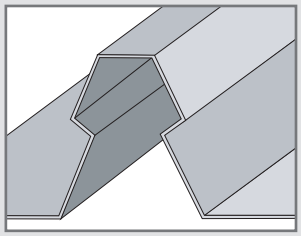

Profiles

S-5-GX 10 or S-5-GX 10 Mini

- Lysaght Klip-lok® 406
- McElroy Metal Mirage
- AEP Span Klip-Rib®
- Metal Sales Clip-Loc
- SpeedDeck® SpeedDeck®
- Safintra Saflok 410
- Steeline Lokdek 680
- Steeline Steel-Rib 500
- Metroll Metlok 500®
- Domico GBS Domitec® Dach

S-5-GX 50 or S-5-GX 50 Mini

- Lysaght Klip-lok Classic® 700
- Lysaght Klip-lok 700 Hi-Strength®
- Stramit® Speed Deck Ultra®
- Fielders KingKlip® 700
- Safintra Saflok 700
- Revolution Roofing Rev-Klip™ 700
- Metroll Metlok 700®

Insert Options

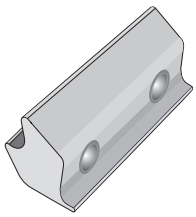

S-5-GX 10 Insert

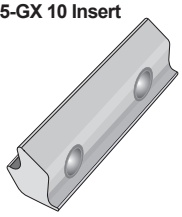

S-5-GX 50 Insert

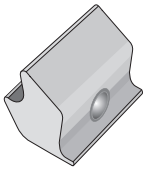

S-5-GXM 10 Mini Insert

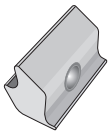

S-5-GXM 50 Mini Insert

S-5-K Grip™

(With S-5-GX 10 Insert)

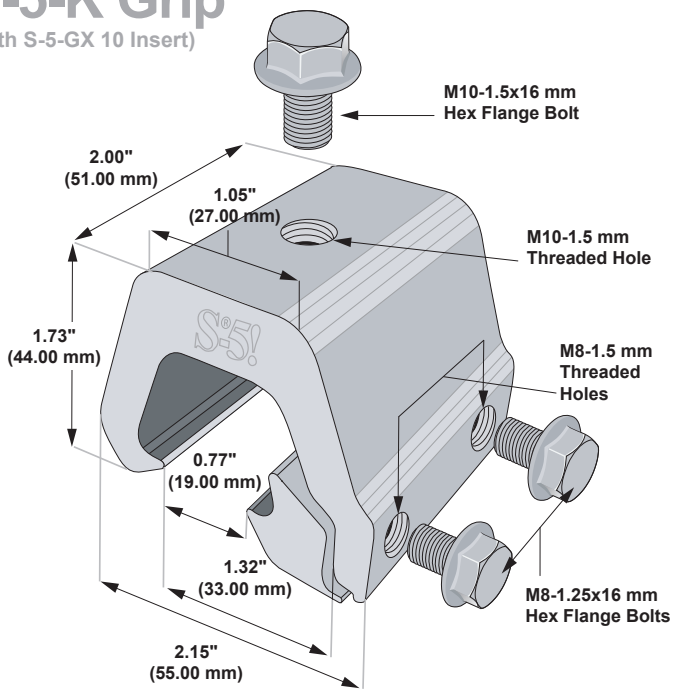

S-5-K Grip™ Mini

(With S-5-GX 10 Mini Insert)

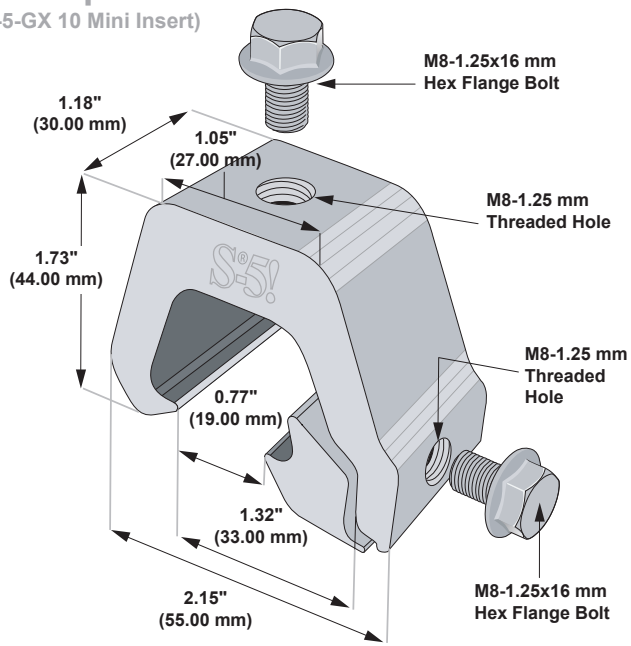

Please note: All measurements are rounded to the second decimal place.

S-5!® Warning! Please use this product responsibly!

Products are protected by multiple U.S. and foreign patents. For published data regarding holding strength, fastener torque, patents, and trademarks, visit the S-5! website at www.S-5.com.

Copyright 2013, Metal Roof Innovations, Ltd.
S-5! aggressively protects its patents, trademarks and copyrights. Version 031213.

S-5!® Master Distributor Europe:

RoofTech GmbH
Merklinger Str. 30
D - 71263 Weil der Stadt
Germany

Tel.: +49 7033 303 49 90
Fax: +49 7033 303 49 95
Email: s-5@rooftech.de
Web: www.rooftech.de